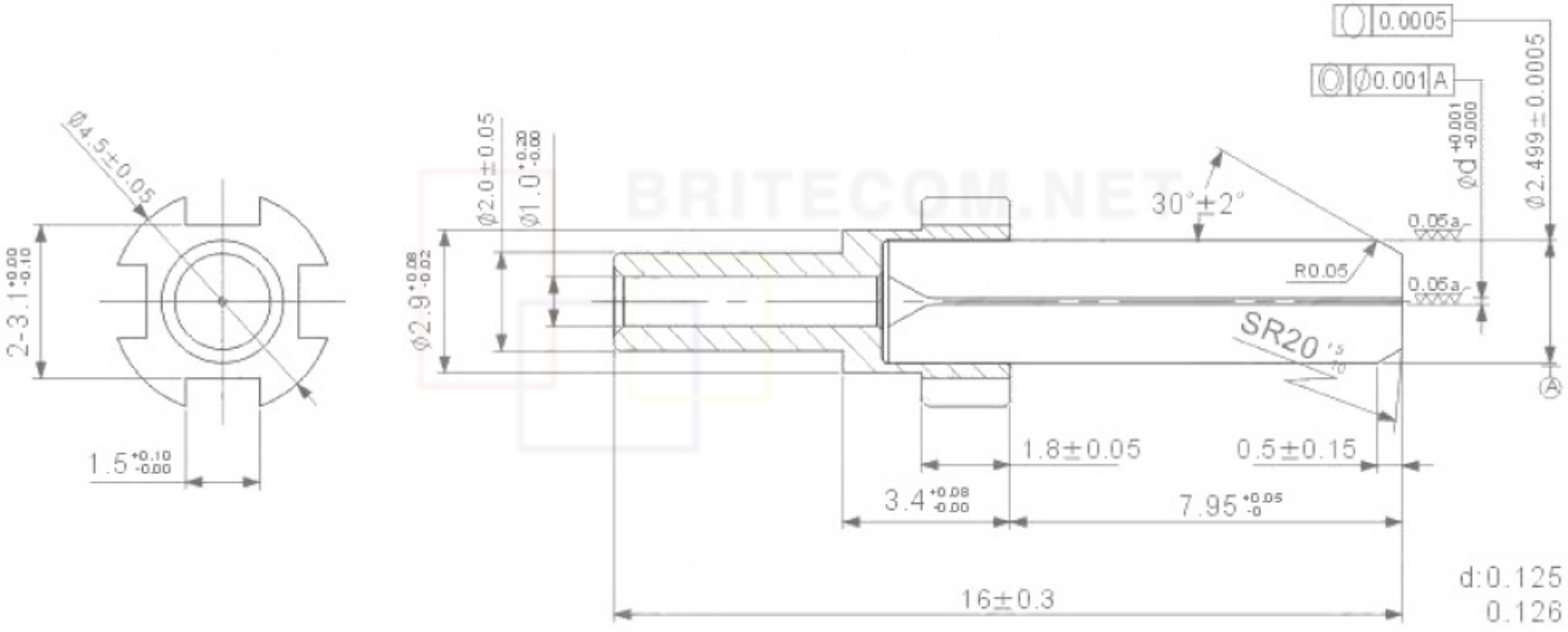
0.0005
0.001 A
Ø4.5±0.05
2-3.1 +0.00 -0.10
1.5 +0.10 -0.00
Ø2.0±0.05
Ø1.0 +0.08 -0.00
Ø2.9 +0.08 -0.02
30°±2°
R0.05
0.05a
0.05a
Ød +0.001 -0.000
Ø2.499±0.0005
SR20
A
1.8±0.05
0.5±0.15
3.4 +0.08 -0.00
7.95 +0.05 -0
16±0.3
d:0.125
0.126